Instruction Manual

Infinity Supported Application
1986-2002 Mazda Rotary 13B/20B

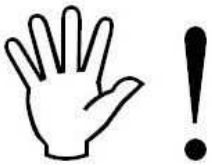

STOP!

THIS PRODUCT HAS LEGAL RESTRICTIONS.
READ THIS BEFORE INSTALLING/USING!

THIS PRODUCT MAY BE USED SOLELY ON VEHICLES USED IN SANCTIONED COMPETITION WHICH MAY NEVER BE USED UPON A PUBLIC ROAD OR HIGHWAY, UNLESS PERMITTED BY SPECIFIC REGULATORY EXEMPTION. (VISIT THE "EMISSIONS" PAGE AT HTTP://WWW.SEMASAN.COM/EMISSIONS FOR STATE BY STATE DETAILS.)

IT IS THE RESPONSIBILITY OF THE INSTALLER AND/OR USER OF THIS PRODUCT TO ENSURE THAT IT IS USED IN COMPLIANCE WITH ALL APPLICABLE LAWS AND REGULATIONS. IF THIS PRODUCT WAS PURCHASED IN ERROR, DO NOT INSTALL AND/OR USE IT. THE PURCHASER MUST ARRANGE TO RETURN THE PRODUCT FOR A FULL REFUND.

THIS POLICY ONLY APPLIES TO INSTALLERS AND/OR USERS WHO ARE LOCATED IN THE UNITED STATES; HOWEVER CUSTOMERS WHO RESIDE IN OTHER COUNTRIES SHOULD ACT IN ACCORDANCE WITH THEIR LOCAL LAWS AND REGULATIONS.

WARNING: This installation is not for the tuning novice! Use this system with EXTREME caution! The AEM Infinity Programmable EMS allows for total flexibility in engine tuning. Misuse or improper tuning of this product can destroy your engine! If you are not well versed in engine dynamics and the tuning of engine management systems DO NOT attempt the installation. Refer the installation to an AEM-trained tuning shop or call 800-423-0046 for technical assistance.

NOTE: All supplied AEM calibrations, Wizards and other tuning information are offered as potential starting points only. IT IS THE RESPONSIBILITY OF THE ENGINE TUNER TO ULTIMATELY CONFIRM IF THE CALIBRATION IS SAFE FOR ITS INTENDED USE. AEM holds no responsibility for any engine damage that results from the misuse or mistuning of this product!

AEM Performance Electronics
AEM Performance Electronics, 2205 126th Street Unit A, Hawthorne, CA 90250
Phone: (310) 484-2322 Fax: (310) 484-0152
http://www.aemelectronics.com
Instruction Part Number: 10-3513
Document Build 1/14/2015

OVERVIEW

The AEM Infinity EMS can be adapted to most fuel injected engines. When possible, AEM will provide "base cal" sessions and configuration files for supported applications that have been verified by AEM engineers. These session and configuration files are starting points only and will need to be modified for your specific application. This manual lists the files available and suggested changes for your engine. It also includes a pinout with suggestions for adapting the Infinity ECU to your engine harness. It is the responsibility of the installer to verify this information before starting the engine.

ENGINES

Mazda

- 1986-2002 13B
- 1990-1996 20B

DOWNLOADABLE FILES

Files can be downloaded from www.aeminfinity.com. An experienced tuner must be available to configure and manipulate the data before driving can commence. The Quick Start Guide and Full Manual describe the steps for logging in and registering at www.aeminfinity.com. These documents are available for download in the Support section of the AEM Electronics website: http://www.aemelectronics.com/products/support/instructions.

ADAPTER HARNESS OPTIONS

30-3704 Infinity 6/8h Mini Universal Harness
Includes pre-wired power, grounds, power relay, fuse box, single wideband & AEMnet. 80 small pins and 30 sealing plugs.

30-3705 Infinity 6/8h Plug & Pin Kit
Includes 80 pin connector with cover, 80 small pins, 1 micro relay with pins and 30 sealing plugs.

30-3600 O2 Sensor Extension Harness
Extension harness to connect AEM UEGO Wideband O2 sensor to 6-pin Deutsch DTM in Infinity Mini Harnesses (30-3702/3703).

30-3601 IP67 Comms Cable
USB Mini-B comms cable; 39" long with right angled connector and bayonet style lock.

30-3602 IP67 Logging Cable
USB A-to-A extension cable: 39" long with right angled connector and bayonet style lock.

GETTING STARTED

Refer to the **10-7100 for EMS 30-7100 Infinity Quick Start Guide** for additional information on getting the engine started with the Infinity EMS.

Import Base Session

Mazda Rotary base session located in C:\Documents\AEM\Infinity Tuner\Sessions\Base Sessions

TRAILING IGNITION

The Mazda Rotary engines use a trailing ignition system. These trailing coils fire sequentially, regardless of which ignition type is selected. A 2-axis ignition split table, "TrailingIgnSplit [deg]" is used to determine the timing of the trailing ignition.

In the image below, the table on the left is the standard Ignition Map [degBTDC]. This table is still used to determine the ignition timing of the leading ignition. The table on the right is the Ignition Split [deg], used to determine the ignition timing of the trailing ignition.

The trailing ignition timing is calculated as IgnMap [degBTDC] - TrailingIgnSplit [deg] = Trailing Ignition [degBTDC]. Therefore if the Leading Ignition fires as 25 [degBTDC] and there is an ignition split of +10 [deg], the Trailing Ignition will fire at 15 [degBTDC].

OIL METERING PUMP

The Infinity ECU has the ability to control the factory Oil Metering Pump (OMP), which uses a stepper motor for flow control. The OMP control incorporates several failsafe options to minimize potential for engine damage. Setup will be described in more detail; however the first step in setting up the OMP is to follow the directions below to modify the factory wiring.

IMPORTANT! Oil Metering Pump Requirements

The factory wiring harness is designed to drive the Oil Metering Pump as a unipolar stepper motor (6 wires). However the Infinity ECU is designed to drive the OMP as a bipolar stepper motor, requiring the removal of the two 12V wires. Failure to remove these 12V wires may affect the performance of the stepper motor and may also cause damage to the Infinity ECU hardware.

Figure 1 below is a connector view showing the terminal position while observing the pin (male) terminal side of the connector. The “---“ denotes an unused connector cavity, and should be used as a reference point. Terminals C and D will need to be extracted from the connector and then properly isolated using heat shrink tube or electrical tape.

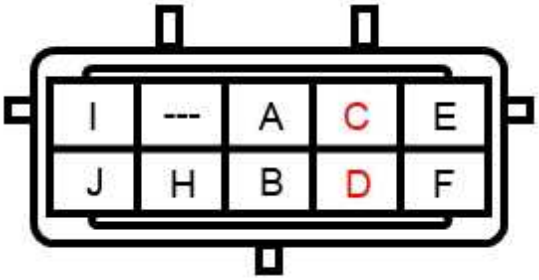

Figure 1: Pin-side connector view showing the 12V terminals in RED.

Procedure to Modify Wiring

STEP 1
Loosen hose clamp at the end of the intake elbow and twist air hose out of the way. Remove the 4 nuts that secure the intake elbow to the throttle body and remove intake elbow.

STEP 2
Locate upper connector for Oil Metering Pump, which can be found near the power steering pump.

STEP 3
Press and hold tab on connector shown while pulling both connector bodies apart.

STEP 4
Using a small flat head screwdriver or pick, gently pry the yellow retainer out of the connector.

STEP 5
Using a small flathead screwdriver or pick, pull the locking tab away from terminal. While the tab is pulled away, **PUSH** the terminal down into the connector using needle nose pliers. There will be resistance, so push carefully to avoid damaging the connector or bending the terminal.

STEP 6
Once Terminals C and D have been pushed down into the connector, the wires can be pulled out from the backside, removing the terminals from the connector completely.

STEP 7
Use heat shrink tube to completely insulate both terminals/wire that were removed from the connector. Plug the 2 connectors together and reinstall the intake elbow and air hose.

Oil Metering Pump Basic Setup

The Infinity ECU is set up to control the Mazda Oil Metering Pump. The Mazda OMP uses a stepper motor with voltage feedback. The voltage feedback is used by the Infinity to verify stepper motor position. There are two failsafes to prevent engine damage in the case of a sensor or stepper motor malfunction. These will be discussed in more detail. The following layout will be helpful throughout this section. If you plan to configure the OMP manually, add a new page to your layout and include the following 2-axis tables and text grids.

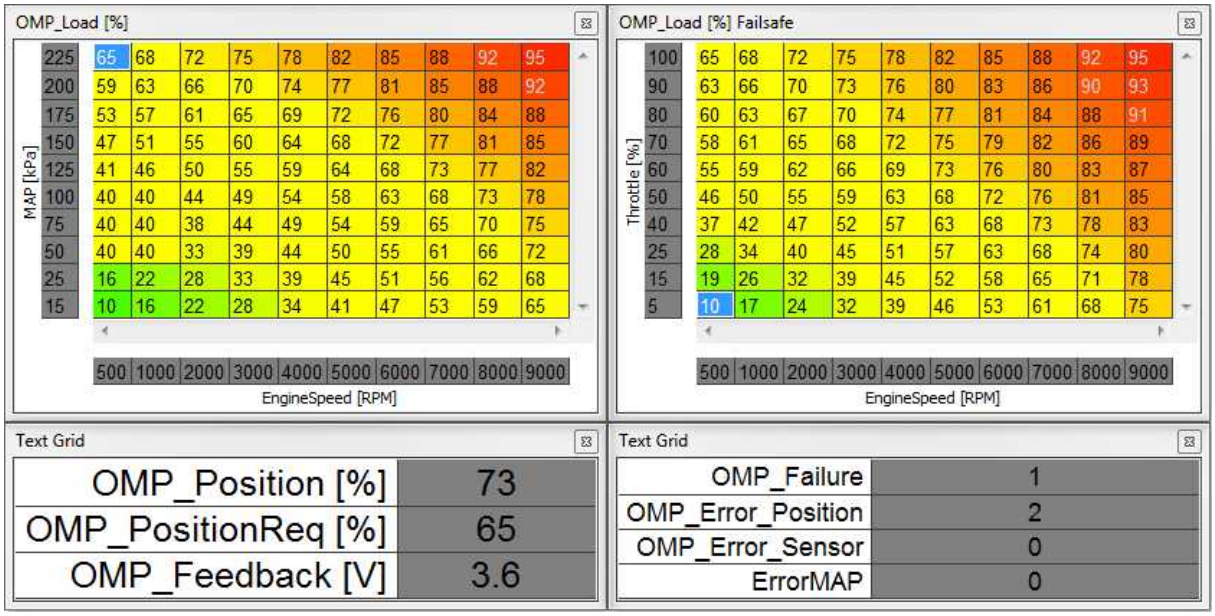

The OMP sensor feedback can be seen in its raw voltage value as “OMP_Feedback [V]. However the feedback is scaled to a 0-100% range, shown as channel “OM_Position [%]”. The load tables “OMP_Load [%]” and “OMP Load [%] Failsafe” both output a % position rather than voltage. The output from these tables can be seen as “OMP_PositionReq [%]”, which uses either table based on failsafe conditions. By default, the tables are populated with values that increase with both engine load and engine speed.

Failsafes

The first failsafe utilizes the table “OMP Load [%] Failsafe”. This table is used in the event of a MAP sensor error. If the channel “ErrorMAP” shows a value of 1 or 2, the channel “OMP_PositionReq [%]” will automatically be calculated using OMP Load [%] Failsafe rather than OMP Load [%]. Therefore both tables need to be populated with useable values.

The second failsafe is based on OMP position and sensor voltage. If either channels “OMP_Error_Position” or “OMP_Error_Sensor” are non-zero, the channel “OMP_Failure” will equal 1. This means that the sensor position indicates an error relative to the requested position, or that there is a sensor failure. In either case, user adjustable engine protection will activate. OMP Engine Protection will be described in the wizard section below.

Oil Metering Pump Setup Wizard

With Infinity Tuner connected to the ECU, go to the Infinity Tuner Wizard page called “Oil Metering Pump”.

The OMP Sensor Setup affects the stepper feedback calibration. The default settings may require minor adjustments. To determine if this needs adjustment, the OMP needs to be installed and Infinity Tuner needs to be connected to the ECU. Assuming no ErrorMAP, you only need to use the table “OMP_Load [%]” for calibration.
Step 1: fully populate OMP_Load [%] table with the value ‘0’. Record the value from channel OMP_Feedback [V].
Step 2: fully populate OMP_Load [%] table with the value ‘100’. Record the value from channel OMP_Feedback [V].
Step 3: set the wizard option “OMP Volts Min” to the minimum voltage recorded minus 0.05V.
Step 4: set the wizard option “OMP Volta Max” to the maximum voltage recorded plus 0.05V. Increasing the voltage range by 0.05V on both ends will prevent an OMP_Error_Sensor while the sensor is at 0% and 100% of its range. The OMP Cal Min can then be reduced to -1 or -2, while OMP Cal Max can be increased to 101 or 102 to compensate for the expanded voltage range.

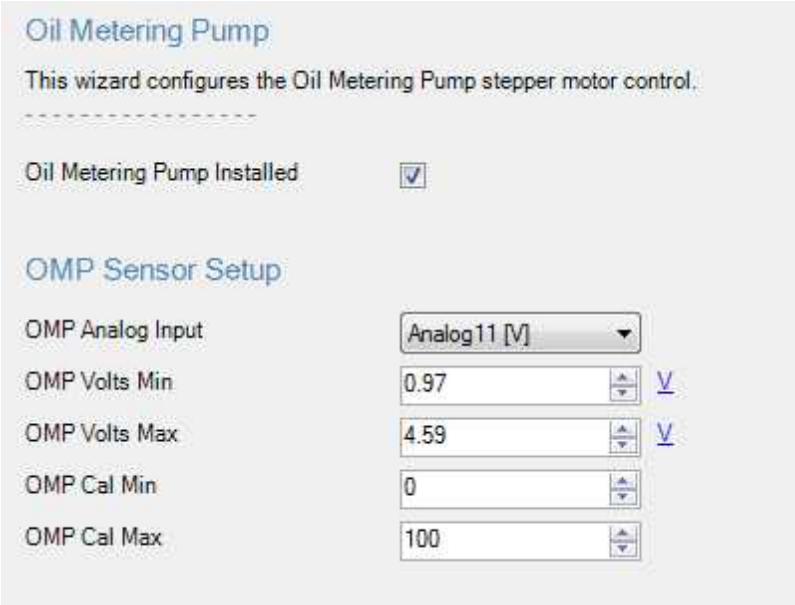

The OMP Load Axis setup lets you choose between kPa and psig for the main load axis.

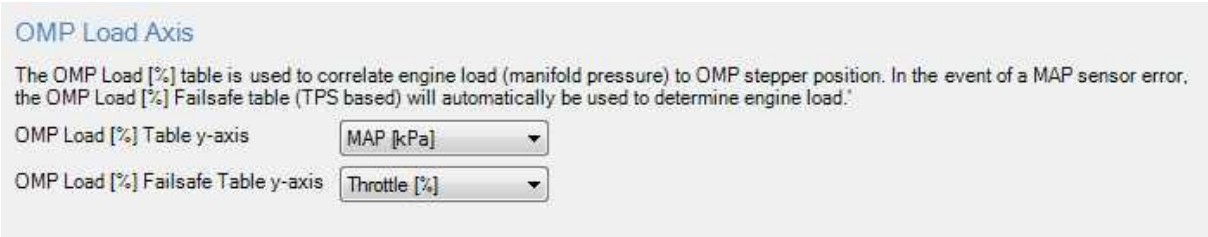

The second failsafe described above is activated if there is a stepper motor position error or a sensor error. The failsafe by default enables a Fuel and Spark Cut, as seen below. The Fuel and Spark cuts can

be individually enabled or disabled, and their RPM setpoints can also be adjusted. The wizard option “OMP Error Position Max [%]” determines the allowable error between the requested position and actual position of the stepper motor. The default is 5% error.

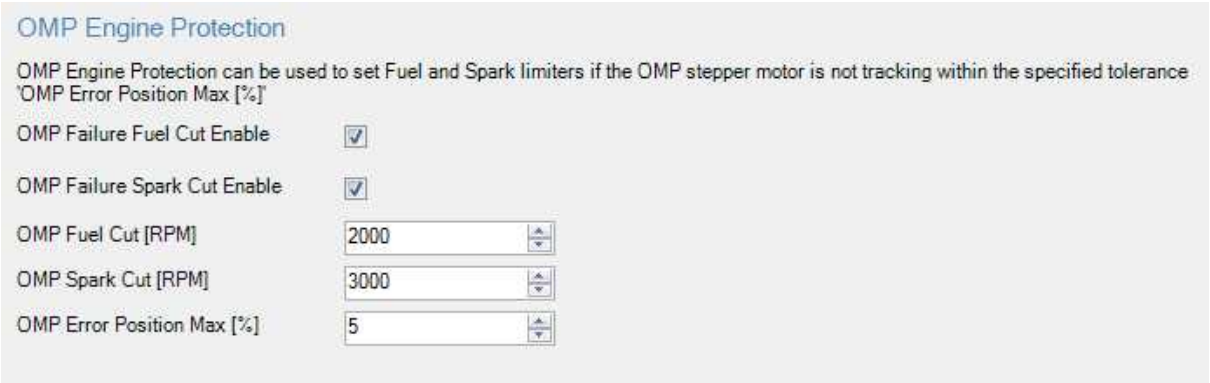

The OMP Stepper Setup default values are designed to work with the Mazda Oil Metering Pump. These values should not be adjusted unless attempting to diagnose a stepper motor problem.

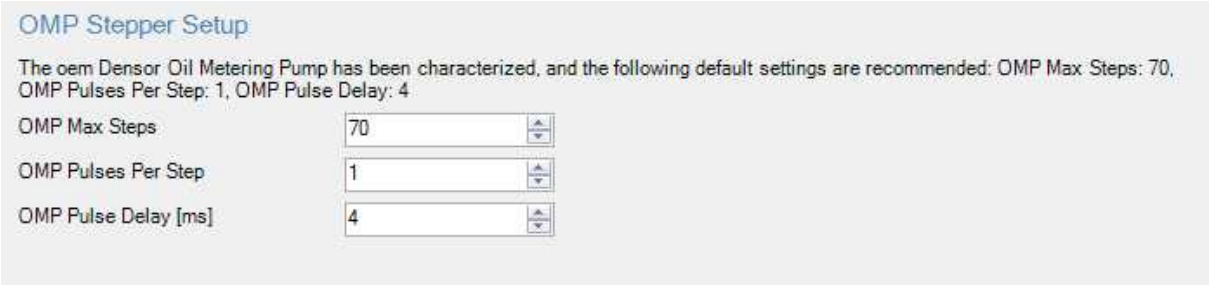

STAGED INJECTION

The Infinity ECU can be configured to use Staged Fuel Injection. For the Mazda Rotary application, Secondary and 3rd Stage injectors can be configured. The setup for Secondary injectors includes a Staged Split table, allowing fuel flow split between Primary and Secondary injectors. Setup for 3rd Stage injectors includes additional parameters based on engine load and engine speed. The Secondary staged injection should be thoroughly understood and configured prior to activating the Tertiary injectors.

Secondary Injection

In the Infinity Tuner Wizard, go to the Injector Setup tab.

Select the total number of injectors.

Select the Fuel type for Secondary Injectors. Note that this Fuel Type applies to both Secondary and 3rd Stage injectors.

Double click on the "Type" column for each injector that you want to set as a Secondary, and use drop down menu to set Type to 'Secondary'. Set the phasing for each injector. In this example, the phasing is setup for a 2-rotor 2-stroke engine, with 2 Primary and 2 Secondary injectors. All of the injectors will be tied to Lambda1 Feedback when 02 Feeback is enabled.

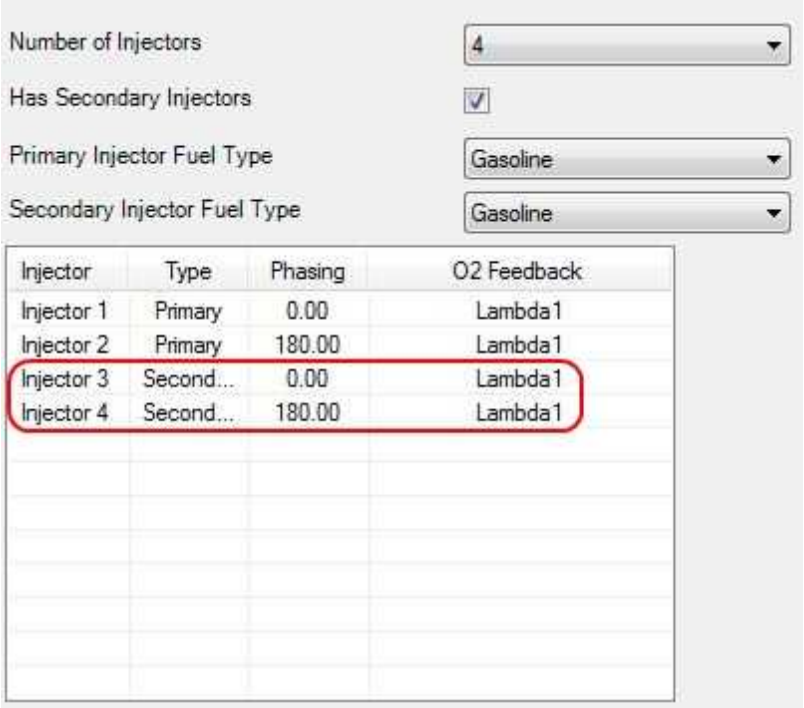

Just below the table in the Injector Setup tab, you can choose the injectors that are installed as Secondary/3rd Stage. Choosing an injector from the database will modify the injector flow rate and injector battery offset tables.

The Secondary Injector Flow Wizard above affects the following tables. The tables can be added to the Infinity Tuner layout and modified manually.

Utilizing a 2D table labeled StagedSplit [%], injector flow can be controlled between primary and secondary injectors. A value of 100% means all flow will go to the primary injectors while 0% means that all flow will go to the secondary injectors. A value of 50% will split the flow equally to primary and secondary injectors.

Injector duty cycle is an important variable that also needs to be considered. If the secondary injectors are larger than the primary injectors (or if the quantity of secondary injectors is not equal to the quantity of primary injectors), a StagedSplit of 50% may not supply maximum fuel flow from all injectors. In order to maximize fuel flow, the StagedSplit [%] should result in equal duty cycles at high loads. To calculate equal duty cycles from both primary and secondary injectors, take the primary injector total flow rate and divide it by the total injector flow rate.

<u>Example</u>
Primary injectors = Injector Dynamics 1000, quantity = 2
Secondary injectors = Injector Dynamic 2000, quantity = 4

Obtain equal duty cycles with the following equation:

$$= \frac{1000 \times 2}{(1000 \times 2) + (2000 \times 4)} = 0.20 = 20\%$$

Using the results of the equation above, 20% is put into the high load areas of the StageSplit [%] table to ensure that neither primary nor secondary injectors becomes saturated. The low load areas of the table are set to 100% so that only the primary injectors are active. The rest of the table should be populated so that the secondary injectors phase in before the primary injectors become saturated.

The following channels can be added to the layout to view the Primary and Secondary injector duty cycles. These can help when populating the StageSplit [%] table to determine when to phase in the Secondary injectors.

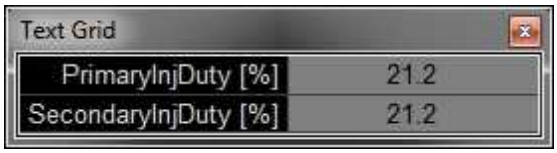

StagedSwitch Table

StagedSwitch Table values of '0' will force stage injection calculations to use primary injectors only; default table values '1' will allow staged injection. This allows the user to override the staged injection activation using a switched input if desired.

3rd Stage Injection

The Number of Injector selection includes all Primary, Secondary, and 3rd Stage injectors. Double click on the "Type" column for each injector that you want to set as a 3rd Stage, and use drop down menu to set Type to '3rd Stage'. Set the "Phasing" and the "02 Feedback" for the 3rd Stage injectors in the same manner.

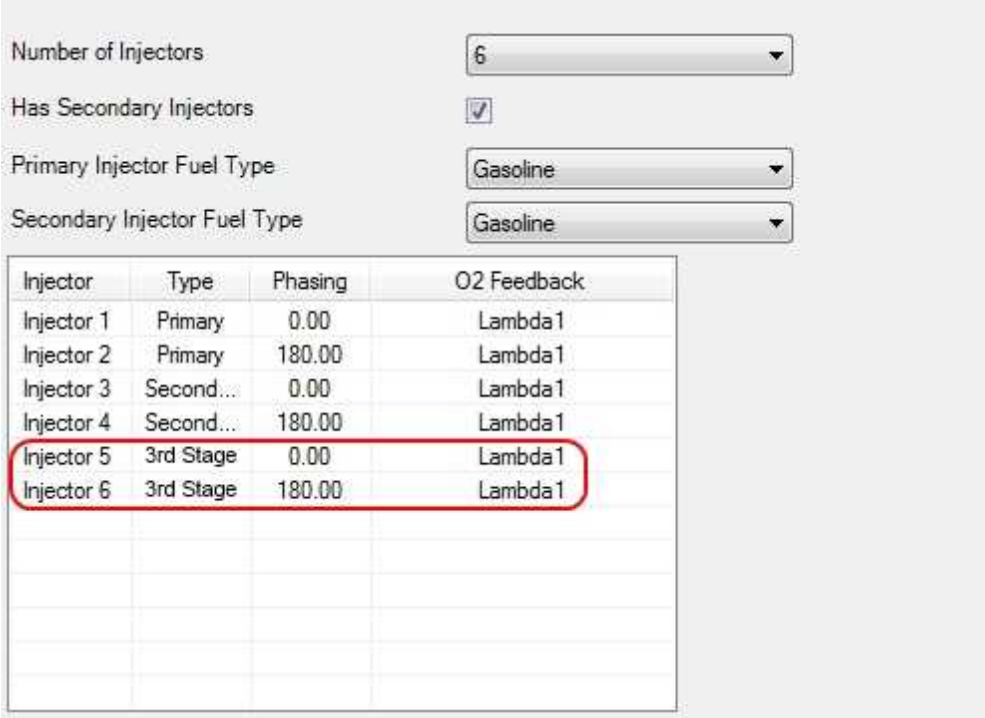

During the Secondary Injection setup, the Secondary/3rd Stage injector flowrate was selection in the Injector Flow Setup. The wizard sets the "Inj3rdFlowRate [cc/min] table to the same values as the InjSecFlowRate [cc/min] table. It is assumed that the Secondary and 3rd Stage injectors will have the same flow rate.

*If injectors will be wired in pairs, i.e. 2 injectors per Infinity injector output, the flowrate table will need to be doubled to account for the change in actual fuel delivery.

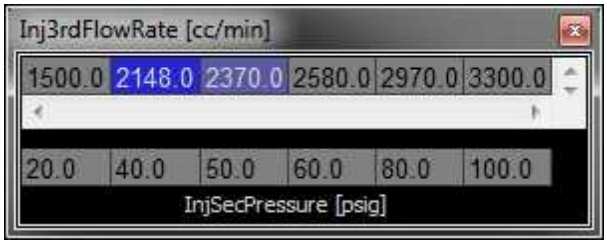

In the Infinity Setup Wizard, navigate to the tab 3rd Stage Injectors. Below are the settings that are used to activate the 3rd Stage injectors. For MAP, choose between kPa and psig. Then set the On Above an Off Below for MAP and RPM. These values will affect the StagedSplit [%] used in the Secondary Injection setup. The 3rd Stage injectors are represented as Secondary injectors in the StagedSplit [%] table, therefore the calculations used to determine duty cycle need to account for the increased Secondary flow rate when the 3rd Stage injectors are activated. Use the example of 2 Secondary injectors: Injector Dynamic 1000, and 2 3rd Stage injectors: Injector Dynamic 2000. When the MAP goes above 0 psig and the engine speed is above 1350 RPM, the Secondary injector flow rate will increase from 2,000 cc/min to 6,000 cc/min. The injector duty cycle calculation for the StagedSplit [%] table needs to account for the new flowrate in the areas where the 3rd Stage injectors will be active.

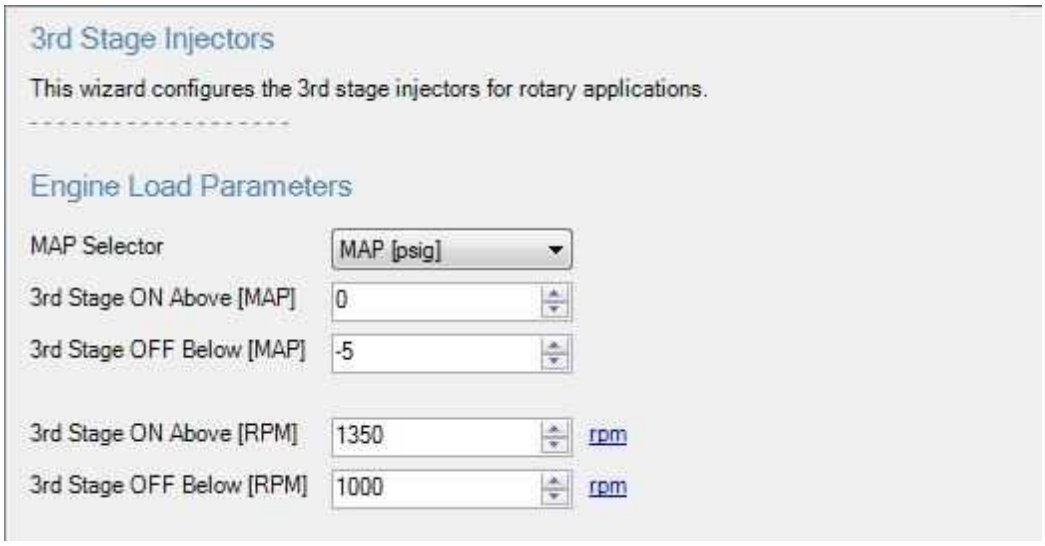

IMPORTANT APPLICATION SPECIFIC SETTINGS

Infinity Tuner Wizard Setup

Engine Rotary

In the Wizard Engine tab confirm the following settings:

Mazda Rotary 13B
Engine Displacement (L) = *1.3*
Ignition Type = Sequential (Coil On Plug) **OR** 1993-1995 FD Factory Ignition
Firing Order = 1-2 Mazda Rotary 13B

Mazda Rotary 20B
Engine Displacement (L) = *2.0*
Ignition Type = Sequential (Coil On Plug)
Firing Order = 1-2-3 Mazda Rotary 20B

Cam/Crank

In the Wizard Cam/Crank tab confirm the following setting:

Mazda Rotary (1986–2002)

There is also the option to use a crank missing tooth without a cam sync. In this case, select the proper Sensor Selection and then expand the section shown below. Check the Cam Sync Generator option. The Present Teeth Threshold and Missing Teeth Threshold are for diagnostic purposes and should not be adjusted.

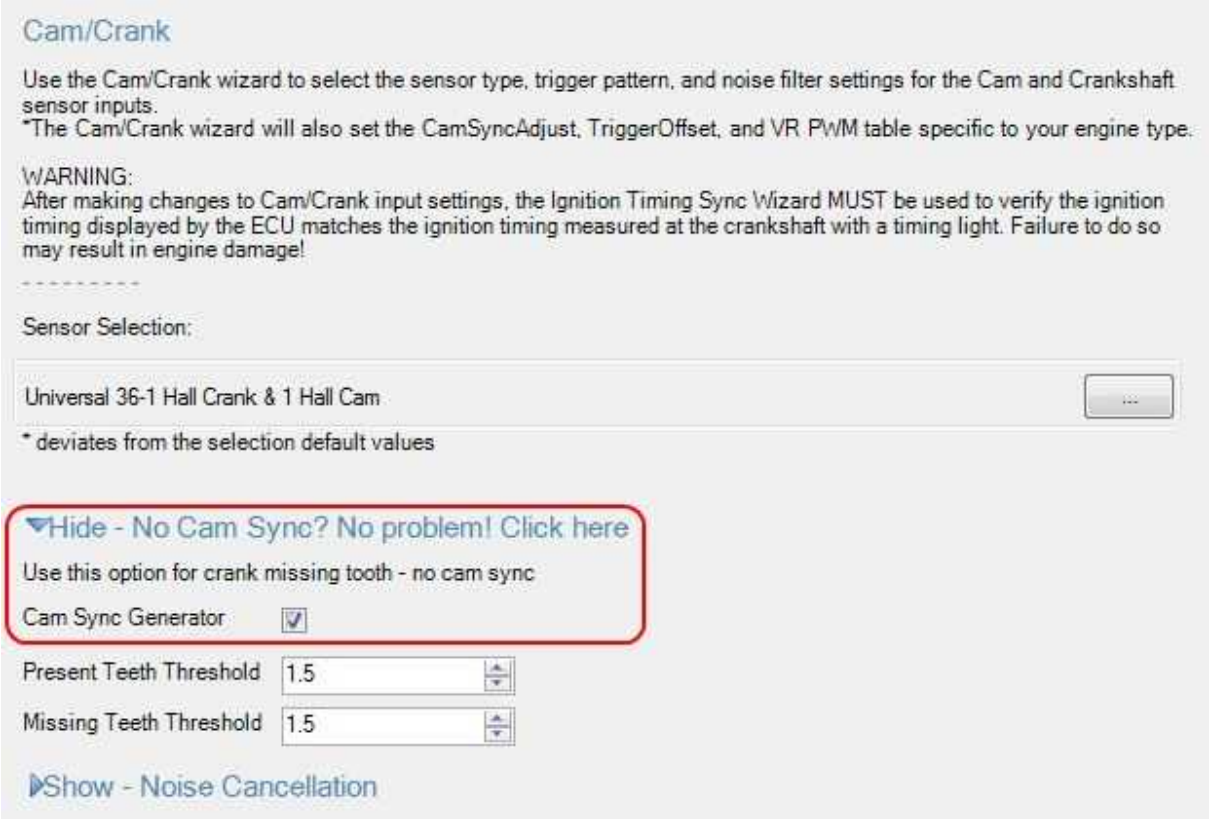

Ignition Sync

Add a text grid control to your layout and select the following channels. Make sure their values match the settings below for initial timing sync.

TrigOffset [degBTDC] = 18.0

CamSyncAdjustment = 11.0

Input Function Assignments

Refer to pinout

Low Side Assignments

In the Wizard LowSide Assignment tab confirm the following settings:

Low Side 0: Fuel Pump
- *Frequency* = 30 Hz
- Duty [%] = See Table
- *LS0_Duty X-Axis* = Engine Speed [RPM]
- *LS0_Duty Y-Axis* = FuelPump

Low Side 2: Coolant Fan
- *Frequency* = 30 Hz
- Duty [%] = See Table
- *LS2_Duty X-Axis* = Engine Speed [RPM]
- *LS2_Duty Y-Axis* = CoolantFan1On

Low Side 5: Tacho
- *Frequency* = See Table
- Duty [%] = 50 %
- *LS5_Duty X-Axis* = Engine Speed [RPM]
- *LS5_Duty Y-Axis* = Any Selection

Low Side 6: IACV
- *Frequency* = 240 Hz
- Duty [%] = See Table
- *LS6_Duty X-Axis* = Engine Speed [RPM]
- *LS6_Duty Y-Axis* = Idle Position

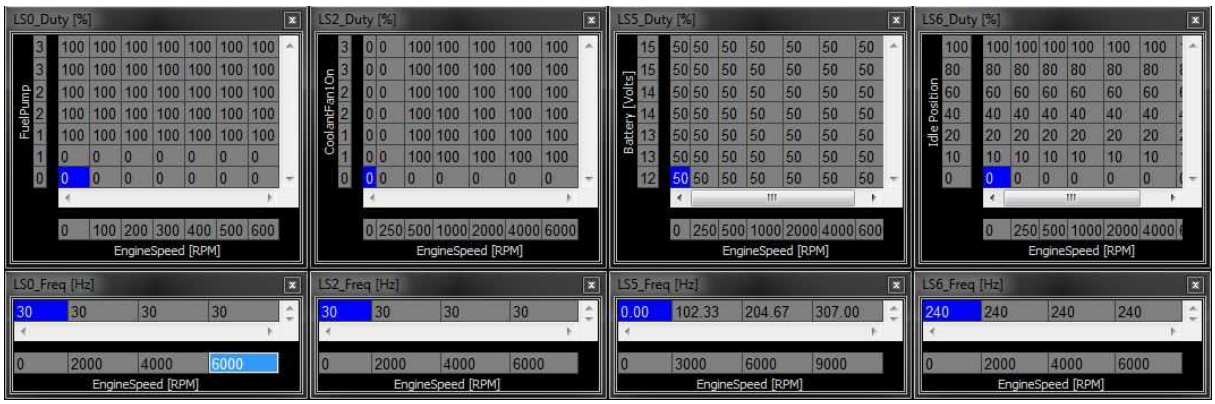

PINOUTS

Infinity 6/8H Pinout

Dedicated	Dedicated and not reconfigurable
Assigned	Assigned but reconfigurable
Available	Available for user setup
Not Applicable	Not used in this configuration
Required	Required for proper function

Infinity Pin	Hardware Reference	Mazda FD Pin	Mazda FD Function	Infinity Hardware Specification	Notes
1	LS 4	1-L	A/C Clutch	Lowside switch, 4A max, No internal flyback diode.	See Setup Wizard Page "LowSide Assignment Tables" for output assignment and 2D table "LS4_Duty [%]" for on/off activation.
2	LS 5	2-B	Tacho	Lowside switch, 4A max with internal flyback diode. Inductive load should NOT have full time power.	The tachometer can be setup in the wizard by setting LS5_Freq [Hz] 1-axis table and the LS5_Duty [%] 2-axis table.
3	LS 6	4-Q	Idle Air Control Valve	Lowside switch, 4A max with internal flyback diode. Inductive load should NOT have full time power.	See Setup Wizard Page "LowSide Assignment Tables" for output assignment and 2D table "LS6_Duty [%]" for on/off activation.
4	LS 7	---	---	Lowside switch, 4A max, No internal flyback diode.	See Setup Wizard Page "LowSide Assignment Tables" for output assignment and 2D table "LS7_Duty [%]" for on/off activation.
5	UEGO1 Heat	---	---	Bosch UEGO controller	Lowside switch for UEGO heater control. Connect to pin 4 of Bosch UEGO sensor. NOTE that pin 3 of the Sensor is heater (+) and must be power by a fused/switched 12V supply.
6	UEGO1 IA	---	---	Bosch UEGO controller	Trim Current signal. Connect to pin 2 of Bosch UEGO sensor
7	UEGO1 IP	---	---	Bosch UEGO controller	Pumping Current signal. Connect to pin 6 of Bosch UEGO sensor
8	UEGO1 UN	---	---	Bosch UEGO controller	Nernst Voltage signal. Connect to pin 1 of Bosch UEGO sensor
9	UEGO1 VM	---	---	Bosch UEGO controller	Virtual Ground signal. Connect to pin 5 of Bosch UEGO sensor.
10	+12V Perm Power	1-A	Voltage Back Up	Dedicated power management CPU	Full time battery power. MUST be powered before the ignition switch input is triggered.
11	Coil 4	1-G	Front Trailing Coil (sequential)	25 mA max source current	0-5V falling edge fire. Do NOT connect directly to coil primary. Must use an ignitor or CDI that accepts a falling edge fire signal.
12	Coil 3	---	---	25 mA max source current	0-5V falling edge fire. Do NOT connect directly to coil primary. Must use an ignitor or CDI that accepts a falling edge fire signal.
13	Coil 2	---	---	25 mA max source current	0-5V falling edge fire. Do NOT connect directly to coil primary. Must use an ignitor

					or CDI that accepts a falling edge fire signal.
14	Coil 1	1-H	Leading Coil (wasted spark)	25 mA max source current	0-5V falling edge fire. Do NOT connect directly to coil primary. Must use an ignitor or CDI that accepts a falling edge fire signal.
15	Coil 6	---	---	25 mA max source current	0-5V falling edge fire. Do NOT connect directly to coil primary. Must use an ignitor or CDI that accepts a falling edge fire signal.
16	Coil 5	1-J	Rear Trailing Coil (sequential)	25 mA max source current	0-5V falling edge fire. Do NOT connect directly to coil primary. Must use an ignitor or CDI that accepts a falling edge fire signal.
17	VR0 (+) - Crank	4-E	Crank Sensor (NE)+	Differential Variable Reluctance Zero Cross Detection	See Setup Wizard page Cam/Crank for options.
18	VR0 (-) - Crank	4-H	Crank Sensor -	Differential Variable Reluctance Zero Cross Detection	See Setup Wizard page Cam/Crank for options.
19	VR1 (-) - Cam	4-H	Crank Sensor -	Differential Variable Reluctance Zero Cross Detection	See Setup Wizard page Cam/Crank for options.
20	VR1 (+) - Cam	4-G	Crank Sensor (G) +	Differential Variable Reluctance Zero Cross Detection	See Setup Wizard page Cam/Crank for options.
21	LS 2	3-D	Radiator Fan Control	Lowside switch, 4A max, No internal flyback diode.	See Setup Wizard Page "LowSide Assignment Tables" for output assignment and 2D table "LS2_Duty [%]" for on/off activation.
22	LS 3	1-F	MIL	Lowside switch, 4A max with internal flyback diode. Inductive load should NOT have full time power.	See Setup Wizard page and corresponding Tables for Idle Air Control.
23	Sensor GND	4-D	Sensor Ground 1	Dedicated analog ground	Analog 0-5V sensor ground
24	Sensor GND	---	---	Dedicated analog ground	Analog 0-5V sensor ground also found on aux connector
25	Digital 0 - Crank	---	---	10K pullup to 12V. Will work with ground or floating switches.	The S2000 uses a VR crank sensor.
26	Digital 1 - Cam1	---	---	10K pullup to 12V. Will work with ground or floating switches.	The S2000 uses VR cam sensors.
27	Digital 2 - Cam2	---	---	10K pullup to 12V. Will work with ground or floating switches.	The S2000 uses VR cam sensors.
28	Digital 3 – Flex Fuel	---	---	10K pullup to 12V. Will work with ground or floating switches.	See Setup Wizard page Input Function Assignments for input mapping options.
29	Digital 4 - VSS#1	1-M	Vehicle Speed Sensor	10K pullup to 12V. Will work with ground or floating switches.	See Setup Wizard page Vehicle Speed for calibration constant.
30	Digital 5	---	---	10K pullup to 12V. Will work with ground or floating switches.	See Setup Wizard page for A/C activation
31	Digital 6	---	---	10K pullup to 12V. Will work with ground or floating	Found on the Aux Connector. Input can be assigned to different pins. See Setup

				switches.	Wizard page Input Function Assignments for input mapping options.
32	Digital 7	---	---	10K pullup to 12V. Will work with ground or floating switches.	Input can be assigned to different pins. See Setup Wizard page Input Function Assignments for input mapping options.
33	GND	4-A	Power Ground 1	Power Ground	Connects to chassis ground
34	CAN A -	---	---	Dedicated High Speed CAN Transceiver	4P DTM Connector found in AEM adapter harness. Contact AEM for additional information.
35	CAN A +	---	---	Dedicated High Speed CAN Transceiver	4P DTM Connector found in AEM adapter harness. Contact AEM for additional information.
36	CAN B -	---	---	Dedicated High Speed CAN Transceiver	Not used
37	CAN B +	---	---	Dedicated High Speed CAN Transceiver	Not used
38	Temp 1 - Coolant Temp	3-E	Engine Coolant Temp Sensor	12 bit A/D, 2.49K pullup to 5V	See "Coolant Temperature" Setup Wizard for selection.
39	Temp 2 - Air Temp (Manifold)	3-L	Intake Air Temp Sensor	12 bit A/D, 2.49K pullup to 5V	See "Air Temperature" Setup Wizard for selection.
40	Temp 3 - Oil Temp	---	---	12 bit A/D, 2.49K pullup to 5V	Found on the Aux Connector. 0-5V analog signal.
41	LS 0	1-T	Fuel Pump Relay	Lowside switch, 4A max, No internal flyback diode.	Switched ground. Will prime for 2 seconds at key on and activate if RPM > 0.
42	LS 1	4-U	Wastegate Control	Lowside switch, 4A max with internal flyback diode. Inductive load should NOT have full time power.	See Setup Wizard page Boost Control for options. Monitor BoostControl [%] channel for output state.
43	GND	4-B	Power Ground 2	Power Ground	Connect directly to battery ground
44	Knock 0	3-M	Knock Sensor	Dedicated knock signal processor	See Knock in Setup Wizard for options.
45	Knock 1	---	---	Dedicated knock signal processor	See Knock in Setup Wizard for options.
46	GND	4-C	Ground 3	Power Ground	Connect directly to battery ground
47	12V_Relay_Control	Relay Pin 85	Harness Main Relay	0.7A max ground sink for external relay control	Connects to relay found in AEM adapter. Will activate at key ON and at key OFF according to the configuration settings.
48	+12V SW (Ign Switch)	1-B	12V Switched	10K pulldown	Full time battery power must be available at infinity pin 10 before this input is triggered.
49	+5V_Out	3-I	Sensor Voltage 1	Regulated, fused +5V supply for sensor power	Analog sensor power
50	+5V_Out	---	---	Regulated, fused +5V supply for sensor power	Analog sensor power and found on auxiliary connector
51	Analog 7 - Throttle	3-G	Throttle Position Sensor	12 bit A/D, 100K pullup to 5V	0-5V analog signal. Do not connect signals referenced to +12V as this can permanently damage the ECU. See the Setup Wizard Set Throttle Range page for automatic min/max calibration.
52	Analog 8 - Map	1-O	MAP Sensor	12 bit A/D, 100K pullup to 5V	0-5V analog signal. See the Manifold Pressure in Setup Wizard for setup and calibration.
53	Analog 9 - Fuel Press	---	---	12 bit A/D, 100K pullup to 5V	0-5V analog signal found on the Auxiliary Connector

54	VR2 (+) - Driven Wheel	---	---	Differential Variable Reluctance Zero Cross Detection	See Driven Wheel Speed Calibration in the Setup Wizard Vehicle Speed page.
55	VR2 (-) - Driven Wheel	---	---	Differential Variable Reluctance Zero Cross Detection	See Driven Wheel Speed Calibration in the Setup Wizard Vehicle Speed page.
56	VR3 (-) - Tag Wheel	---	---	Differential Variable Reluctance Zero Cross Detection	See Non Driven Wheel Speed Calibration in the Setup Wizard Vehicle Speed page.
57	VR3 (+) - Tag Wheel	---	---	Differential Variable Reluctance Zero Cross Detection	See Non Driven Wheel Speed Calibration in the Setup Wizard Vehicle Speed page.
58	HS Out 0	---	---	0.7A max, High Side Solid State Relay	+12V High Side Drive. See Setup Wizard Honda VTEC page for options.
59	Stepper_1B	4-I	Oil Metering Pump A	Automotive, Programmable Stepper Driver, up to 28V and ±1.4A	Be sure that each internal coil of the stepper motor is properly paired with the 1A/1B and 2A/2B ECU outputs. Supports Bi-Polar stepper motors only.
60	Stepper_2B	4-L	Oil Metering Pump F	Automotive, Programmable Stepper Driver, up to 28V and ±1.4A	Be sure that each internal coil of the stepper motor is properly paired with the 1A/1B and 2A/2B ECU outputs. Supports Bi-Polar stepper motors only.
61	HBridge0_0	---	---	5.0A max Throttle Control Hbridge Drive	2000-2005 S2000 do not use drive by wire throttle
62	HBridge0_1	---	---	5.0A max Throttle Control Hbridge Drive	2000-2005 S2000 do not use drive by wire throttle
63	+12V	Relay Pin 87	Harness Main Relay	Main Power	12 volt power from relay powers the Infinity, Lambda sensor, and AEMNet
64	Injector 6	---	---	Saturated or peak and hold, 3A max continuous	Spare injector output
65	Injector 5	---	---	Saturated or peak and hold, 3A max continuous	Spare injector output
66	Injector 4	4-Z	Injector (rear secondary)	Saturated or peak and hold, 3A max continuous	Injector 4
67	GND	---	---	Power Ground	Connects directly to ground
68	+12V	---	---	Main Power	12 volt power from relay powers the Infinity
69	Analog 19 - APP2	---	---	12 bit A/D, 100K pullup to 5V	0-5V analog signal. Do not connect signals referenced to +12V as this can permanently damage the ECU.
70	Analog 18 - APP1	---	---	12 bit A/D, 100K pullup to 5V	0-5V analog signal. Do not connect signals referenced to +12V as this can permanently damage the ECU.
71	Analog 16 - Throttle2	---	---	12 bit A/D, 100K pullup to 5V	0-5V analog signal found on the Auxiliary Connector
72	Harness_Flash_Enable	+12V Jumper	Firmware flash enable	10K pulldown	Not usually needed for automatic firmware updates through Infinity Tuner. If connection errors occur during update, jump the 12V Flash Connector before proceeding with upgrade. Disconnect the 12V Flash Connector after the update.
73	Ana13 - Oil Press	---	---	12 bit A/D, 100K pullup to 5V	0-5V analog signal found on the Auxiliary Connector
74	Analog 11	3-A	OMP Position	12 bit A/D, 100K pullup to 5V	0-5V analog signal found on the Auxiliary Connector

75	Analog 10 - Baro	---	---	12 bit A/D, 100K pullup to 5V	0-5V analog signal found on the Auxiliary Connector
76	Injector 3	4-X	Injector (front secondary)	Saturated or peak and hold, 3A max continuous	Injector 3
77	Injector 2	4-Y	Injector (rear primary)	Saturated or peak and hold, 3A max continuous	Injector 2
78	Injector 1	4-W	Injector (front primary)	Saturated or peak and hold, 3A max continuous	Injector 1
79	Stepper_2A	4-J	Oil Metering Pump B	Automotive, Programmable Stepper Driver, up to 28V and ±1.4A	Be sure that each internal coil of the stepper motor is properly paired with the 1A/1B and 2A/2B ECU outputs. Supports Bi-Polar stepper motors only.
80	Stepper_1A	4-K	Oil Metering Pump E	Automotive, Programmable Stepper Driver, up to 28V and ±1.4A	Be sure that each internal coil of the stepper motor is properly paired with the 1A/1B and 2A/2B ECU outputs. Supports Bi-Polar stepper motors only.

FD Pin Numbering

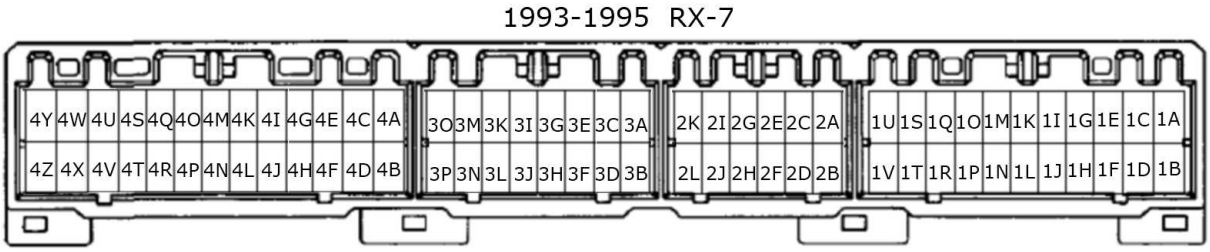

Mazda FD Connector Viewed from Pin Side

Infinity Pin Numbering

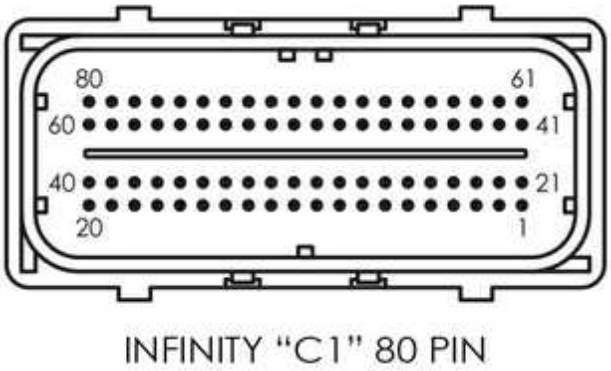

AEM Infinity Connectors Viewed from Wire Side

RX7 FD - Infinity 6

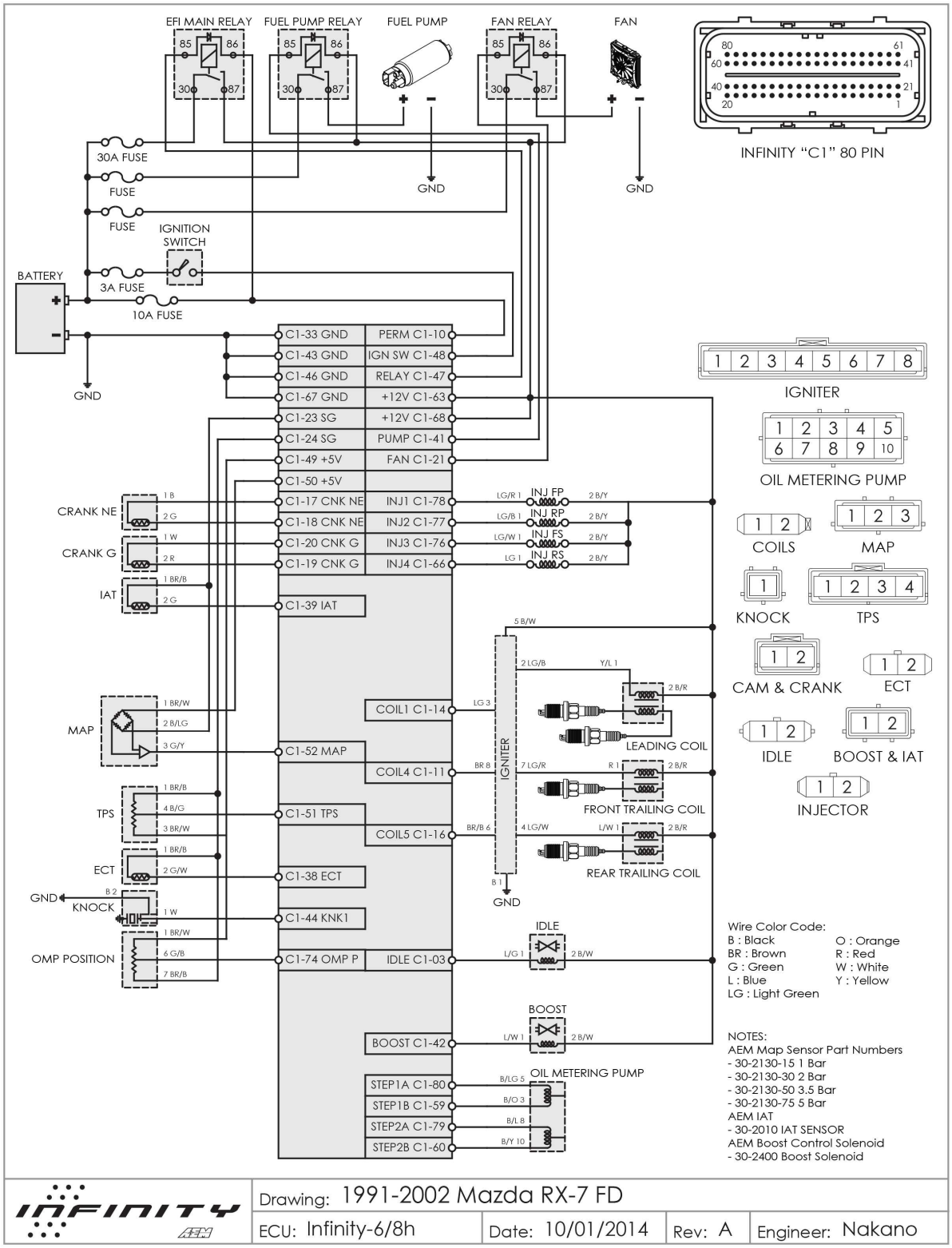

Coil On Plug - 2 Rotor - Infinity 6

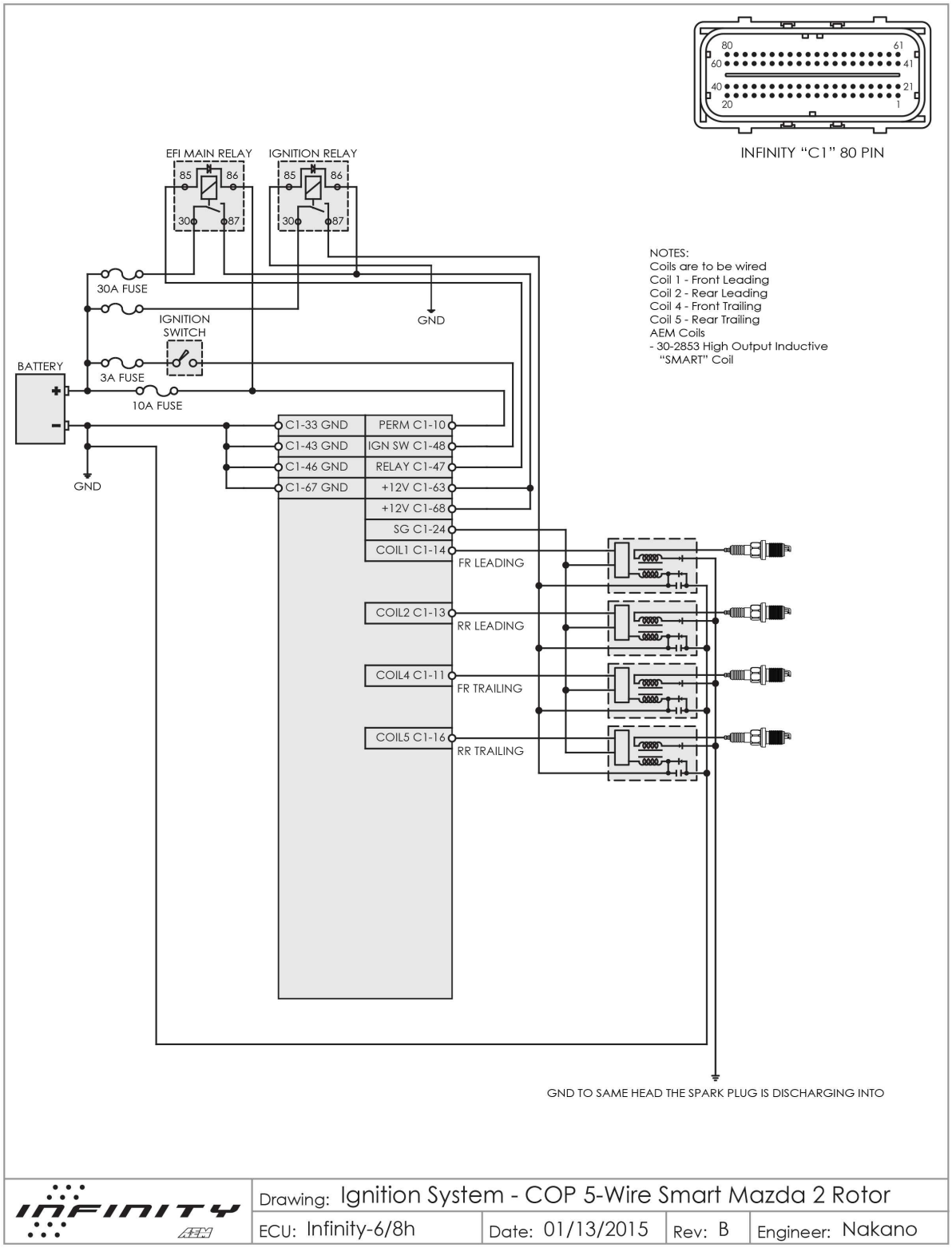

Coil On Plug - 3 Rotor - Infinity 6

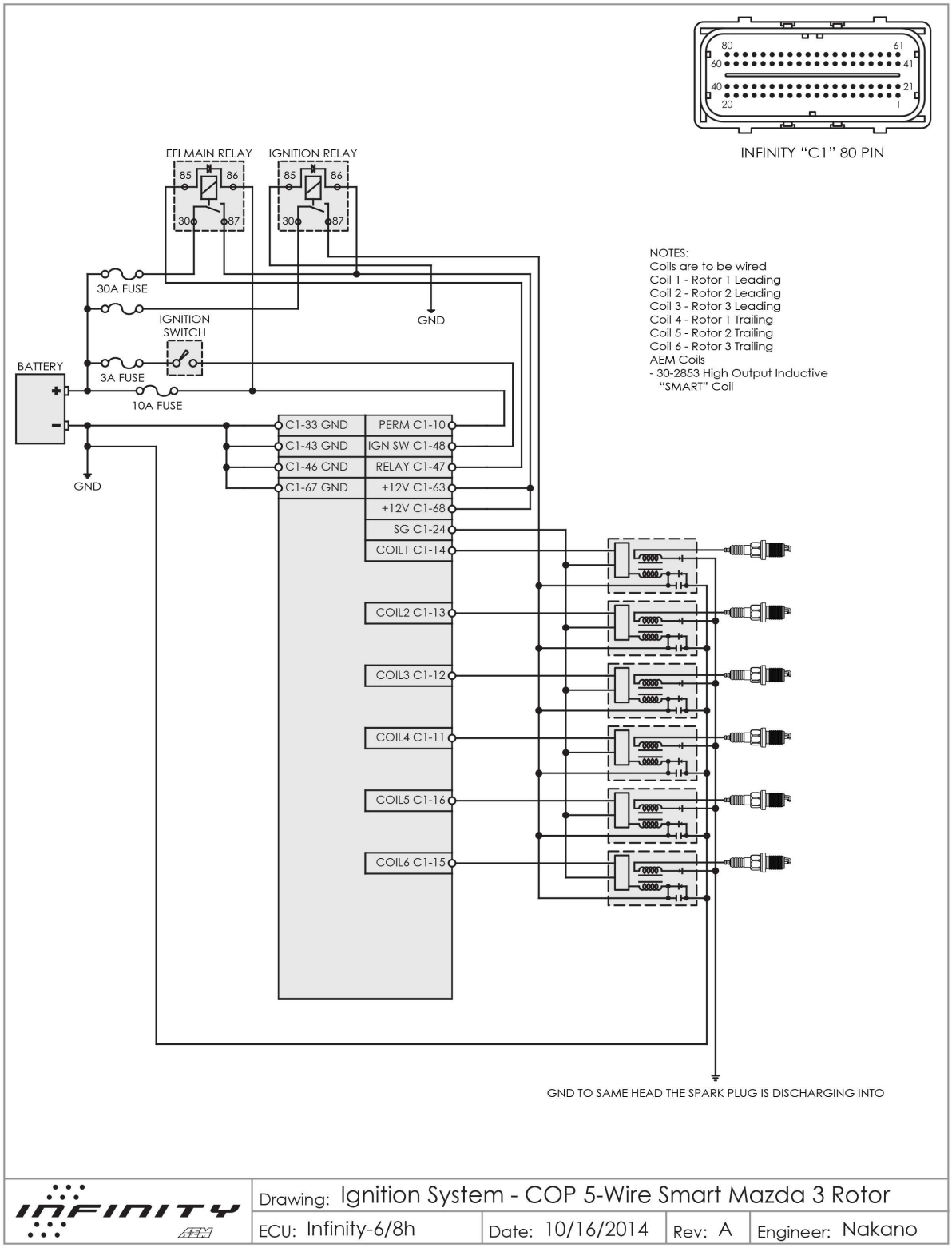

12 MONTH LIMITED WARRANTY

Advanced Engine Management Inc. warrants to the consumer that all AEM High Performance products will be free from defects in material and workmanship for a period of twelve (12) months from date of the original purchase. Products that fail within this 12-month warranty period will be repaired or replaced at AEM's option, when determined by AEM that the product failed due to defects in material or workmanship. This warranty is limited to the repair or replacement of the AEM part. In no event shall this warranty exceed the original purchase price of the AEM part nor shall AEM be responsible for special, incidental or consequential damages or cost incurred due to the failure of this product. Warranty claims to AEM must be transportation prepaid and accompanied with dated proof of purchase. This warranty applies only to the original purchaser of product and is non-transferable. All implied warranties shall be limited in duration to the said 12-month warranty period. Improper use or installation, accident, abuse, unauthorized repairs or alterations voids this warranty. AEM disclaims any liability for consequential damages due to breach of any written or implied warranty on all products manufactured by AEM. Warranty returns will only be accepted by AEM when accompanied by a valid Return Merchandise Authorization (RMA) number. Product must be received by AEM within 30 days of the date the RMA is issued.

Please note that before AEM can issue an RMA for any electronic product, it is first necessary for the installer or end user to contact the EMS tech line at 1-800-423-0046 to discuss the problem. Most issues can be resolved over the phone. Under no circumstances should a system be returned or a RMA requested before the above process transpires.

AEM will not be responsible for electronic products that are installed incorrectly, installed in a non-approved application, misused, or tampered with.

Any AEM electronics product can be returned for repair if it is out of the warranty period. There is a minimum charge of $50.00 for inspection and diagnosis of AEM electronic parts. Parts used in the repair of AEM electronic components will be extra. AEM will provide an estimate of repairs and receive written or electronic authorization before repairs are made to the product.